PARTS DIAGRAM | 1911 MARK I
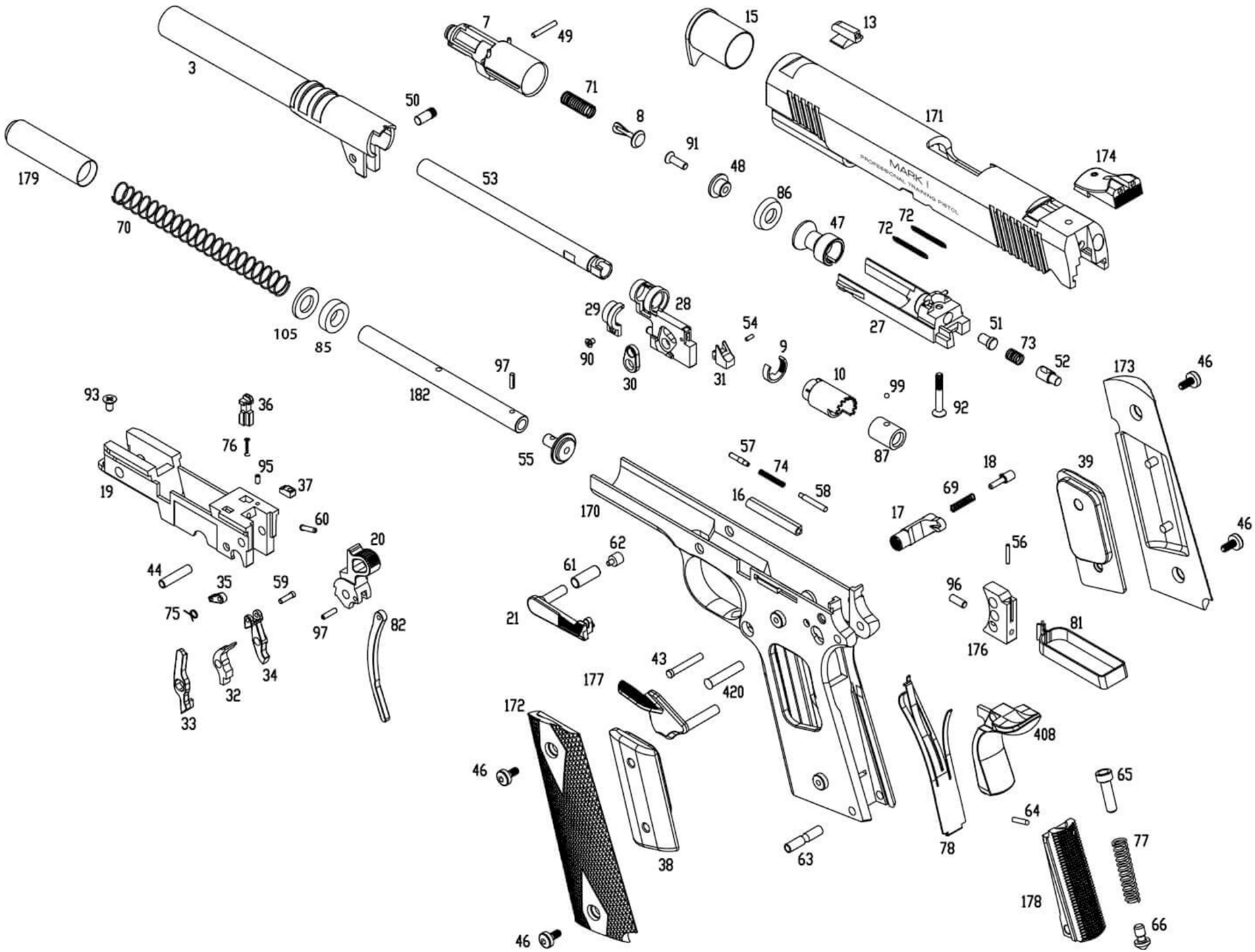
CR P03 V02 R2012.07.17