PARTS DIAGRAM | 1911 MARK IV
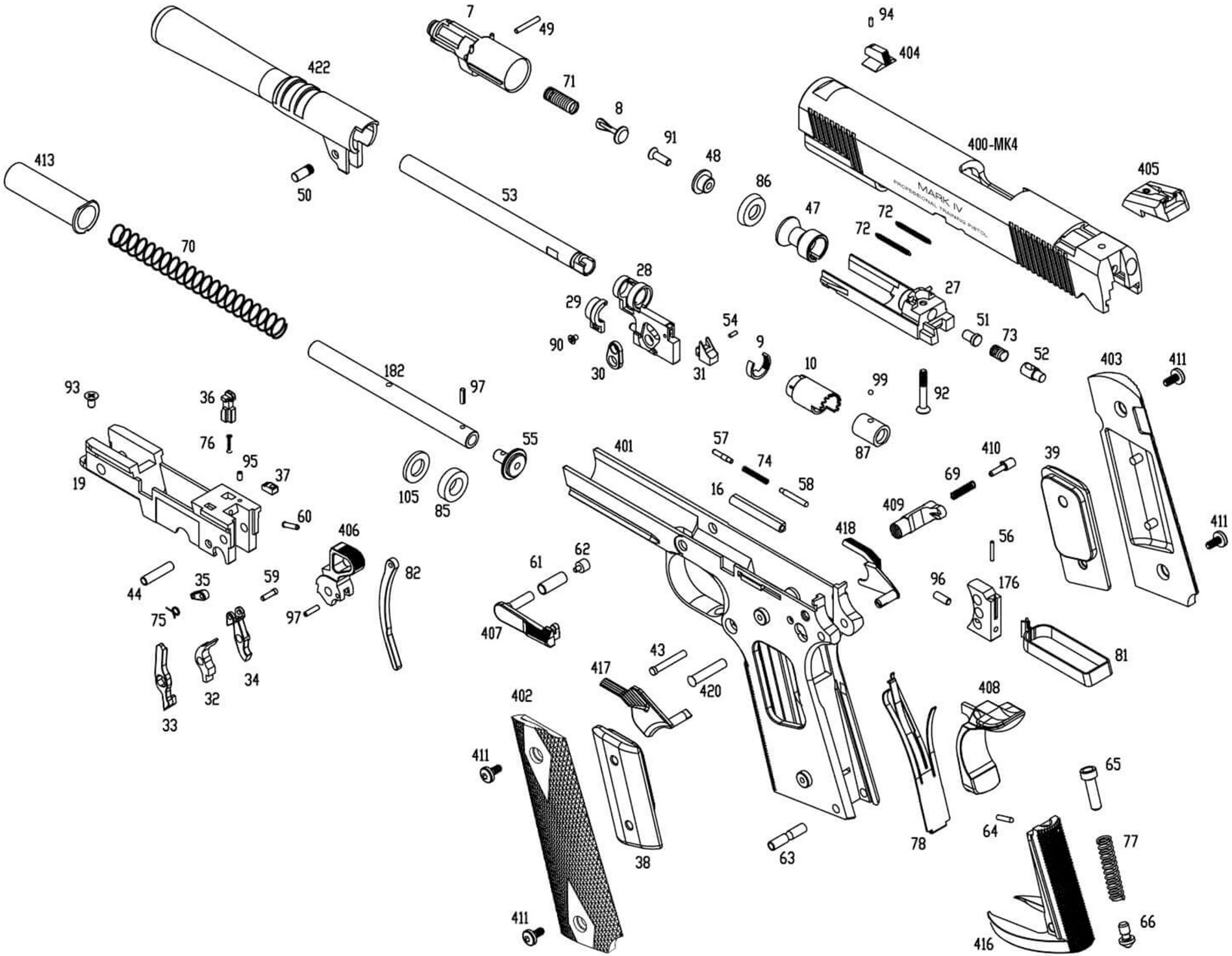
CR P07 V02 R2012.07.17